Order No. PAPAMY1411001TE

# Technical Information

**Air Conditioner**

## Subject: H20 Error in F-series Air-to-Water System

**⚠ WARNING**

This service information is designed for experienced technicians only and is not designed for used by the general public..
It does not contain warnings or cautions to advise non-technical individuals of potential dangers in attempting to service a product. Products powered by electricity should be serviced or repaired only by experienced professional technicians. Any attempt to service or repair the product or products dealt with in this service information by anyone else could result in serious injury or death.

## CONTENTS


| | | Page |
|---|---|---|
| 1. | Symptom | 1 |
| 2. | Cause | 1 |
| 3. | Applicable Model | 1 |
| 4. | Verification | 2 |
| 5. | Countermeasure And Treatment | 3 |


## 1. Symptom

The unit is stopped with an error flashing.
Error code diagnostic shows H20 (DC Pump Abnormality)

## 2. Cause

H20 could occur due to failure of a DC water pump or an electronic-controller (PCB).
Refer to the error code verification flow chart.

However, for a particular lot of F-series Air-to-water PCB, a small percentage of failure has been caused by the defective of the transistor Q8 of the PCB which causes the pump not operating at all.
Refer to the applicable model.

Panasonic®

© 2014 Panasonic Appliances Air-Conditioning Malaysia Sdn. Bhd.(11969-T).
All rights reserved. Unauthorized copying and distribution is a violation of law.

## 3. Applicable Model

| NO. | MODEL NO. | AFFECTED S/N RANGE |
|---|---|---|
| 1 | WH-MDC05F3E5 | 56144 00001 ~ 56144 00526 |
| 2 | WH-SHF09F3E5 | 55153 00001 ~ 55153 00107 |
| 3 | WH-SHF09F3E8 | 55151 00001 ~ 55151 00043 |
| 4 | WH-SHF12F6E5 | 55154 00001 ~ 55154 00122 |
| 5 | WH-SHF12F9E8 | 55152 00001 ~ 55152 00190 |
| 6 | WH-SXC09F3E5 | 55148 00001 ~ 55148 00160 |
| 7 | WH-SXC09F3E8 | 55144 00001 ~ 55144 00234 |
| 8 | WH-SXC09F9E8 | 55150 00001 ~ 55150 00177 |
| 9 | WH-SXC12F6E5 | 55149 00001 ~ 55149 00167 |
| 10 | WH-SXC12F9E8 | 55145 00001 ~ 55145 00446 |
| 11 | WH-SXC16F9E8 | 55143 00001 ~ 55143 00318 |

Remark:
The above Serial Number (S/N) range is not definite as some unit may have been rectified by Factory or Sales Co prior to Sales.
Contact Sales Co or PAPAEU for accurate S/N verification.

## 4. Verification

Refer to below flow chart for H20 error diagnosis.

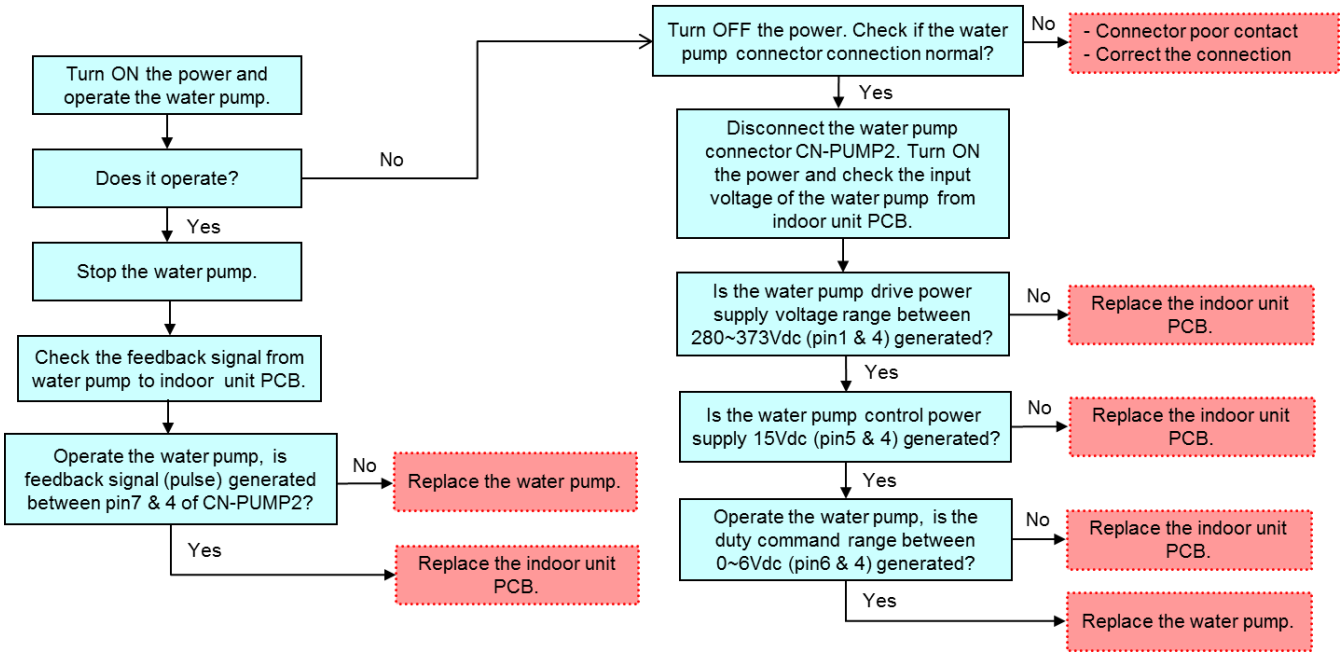


Panasonic®

© 2014 Panasonic Appliances Air-Conditioning Malaysia Sdn. Bhd.(11969-T).
All rights reserved. Unauthorized copying and distribution is a violation of law.

# 5. Countermeasure and Treatment

If the diagnosis of H20 confirms the PCB failure, replace the PCB.
PCSE- Spare Part Center and PAPAEU have the latest stock (effective from end-October 2014).

This problem shall be treated on a case-by-case basis.

| NO. | MODEL NO. | SPARE PART |
|---|---|---|
| 1 | WH-MDC05F3E5 | CWA73C8149R |
| 2 | WH-SHF09F3E5 | CWA73C8312 |
| 3 | WH-SHF09F3E8 | CWA73C8310 |
| 4 | WH-SHF12F6E5 | CWA73C8313 |
| 5 | WH-SHF12F9E8 | CWA73C8311 |
| 6 | WH-SXC09F3E5 | CWA73C8153 |
| 7 | WH-SXC09F3E8 | CWA73C8147 |
| 8 | WH-SXC09F9E8 | CWA73C8148 |
| 9 | WH-SXC12F6E5 | CWA73C8154 |
| 10 | WH-SXC12F9E8 | CWA73C8151 |
| 11 | WH-SXC16F9E8 | CWA73C8047 |

Panasonic®

© 2014 Panasonic Appliances Air-Conditioning Malaysia Sdn. Bhd.(11969-T).
All rights reserved. Unauthorized copying and distribution is a violation of law.